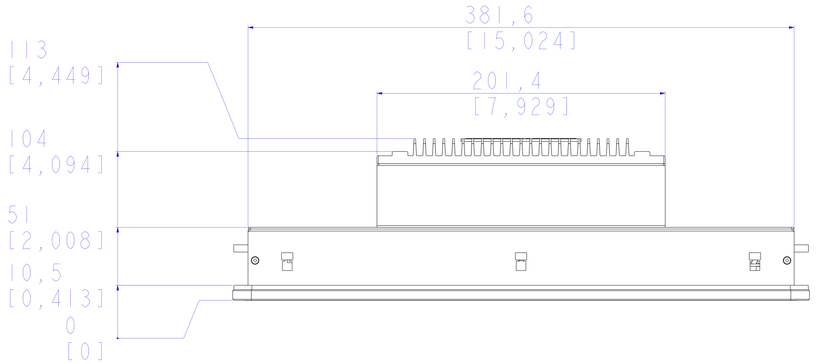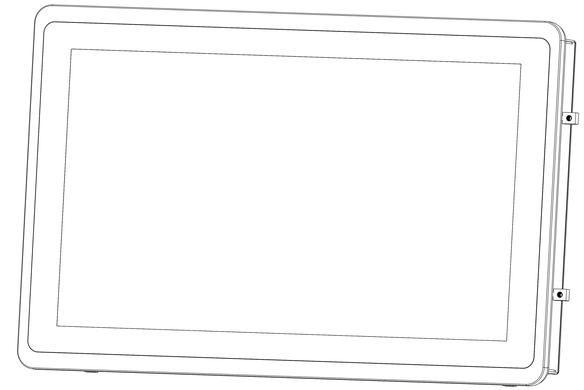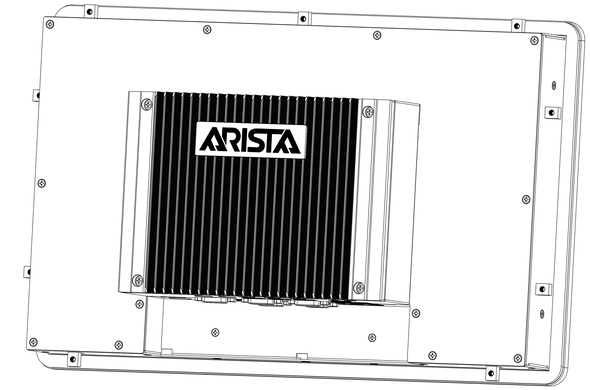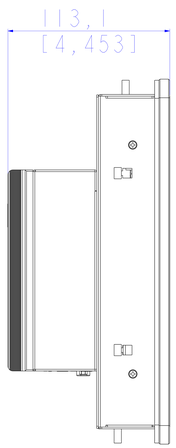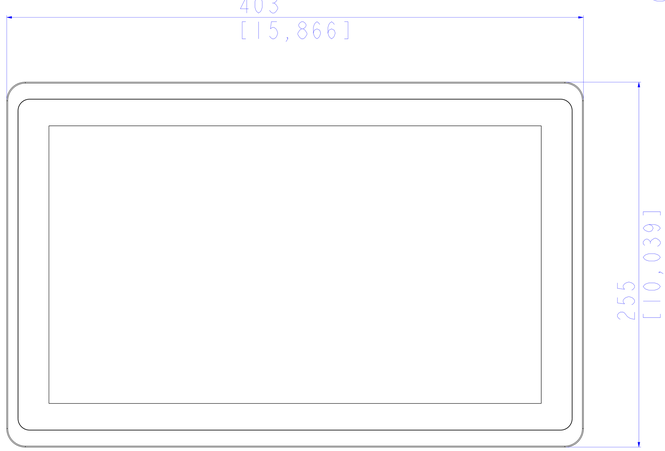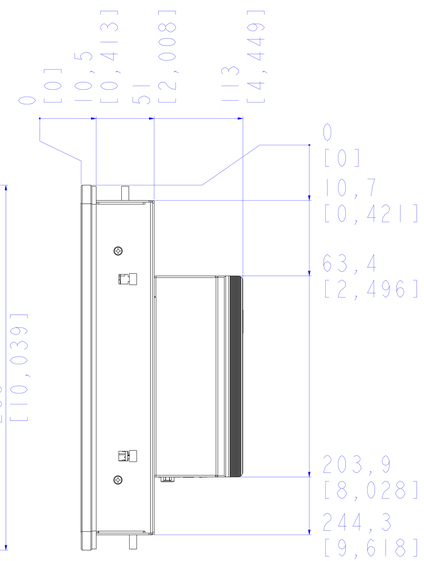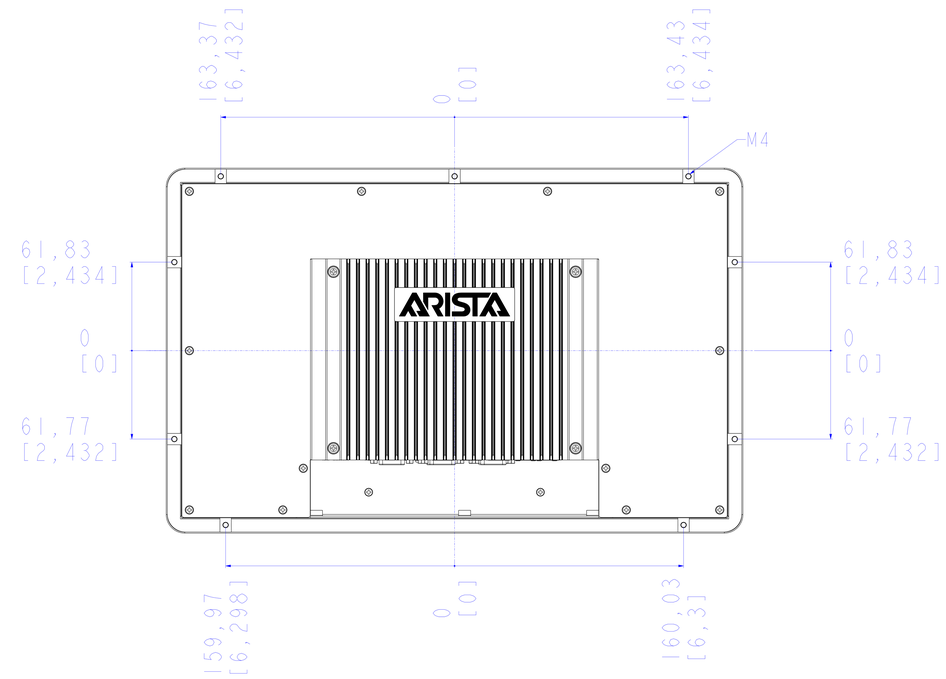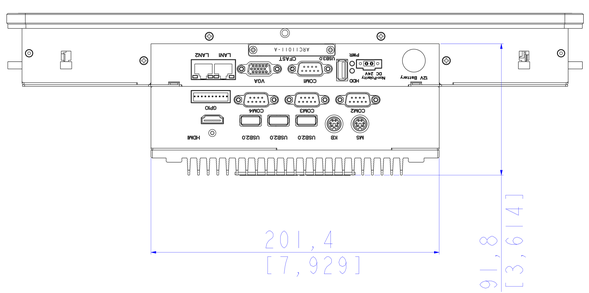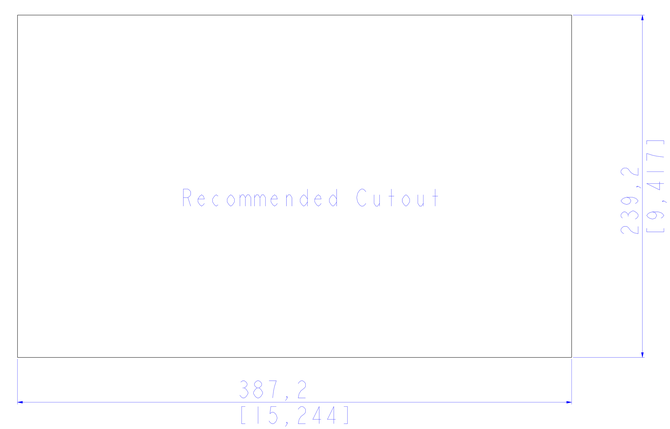ARP-3816AP-E01